L76K

Reference Design

GNSS Module Series

Version: 1.0

Date: 2021-10-20

Status: Released

At Quectel, our aim is to provide timely and comprehensive services to our customers. If you require any assistance, please contact our headquarters:

Quectel Wireless Solutions Co., Ltd.
Building 5, Shanghai Business Park Phase III (Area B), No.1016 Tianlin Road, Minhang District, Shanghai 200233, China
Tel: +86 21 5108 6236
Email: info@quectel.com

Or our local offices. For more information, please visit:
http://www.quectel.com/support/sales.htm.

For technical support, or to report documentation errors, please visit:
http://www.quectel.com/support/technical.htm.
Or email us at: support@quectel.com.

Legal Notices

We offer information as a service to you. The provided information is based on your requirements and we make every effort to ensure its quality. You agree that you are responsible for using independent analysis and evaluation in designing intended products, and we provide reference designs for illustrative purposes only. Before using any hardware, software or service guided by this document, please read this notice carefully. Even though we employ commercially reasonable efforts to provide the best possible experience, you hereby acknowledge and agree that this document and related services hereunder are provided to you on an “as available” basis. We may revise or restate this document from time to time at our sole discretion without any prior notice to you.

Use and Disclosure Restrictions

License Agreements

Documents and information provided by us shall be kept confidential, unless specific permission is granted. They shall not be accessed or used for any purpose except as expressly provided herein.

Copyright

Our and third-party products hereunder may contain copyrighted material. Such copyrighted material shall not be copied, reproduced, distributed, merged, published, translated, or modified without prior written consent. We and the third party have exclusive rights over copyrighted material. No license shall be granted or conveyed under any patents, copyrights, trademarks, or service mark rights. To avoid ambiguities, purchasing in any form cannot be deemed as granting a license other than the normal non-exclusive, royalty-free license to use the material. We reserve the right to take legal action for noncompliance with abovementioned requirements, unauthorized use, or other illegal or malicious use of the material.

Trademarks

Except as otherwise set forth herein, nothing in this document shall be construed as conferring any rights to use any trademark, trade name or name, abbreviation, or counterfeit product thereof owned by Quectel or any third party in advertising, publicity, or other aspects.

Third-Party Rights

This document may refer to hardware, software and/or documentation owned by one or more third parties ("third-party materials"). Use of such third-party materials shall be governed by all restrictions and obligations applicable thereto.

We make no warranty or representation, either express or implied, regarding the third-party materials, including but not limited to any implied or statutory, warranties of merchantability or fitness for a particular purpose, quiet enjoyment, system integration, information accuracy, and non-infringement of any third-party intellectual property rights with regard to the licensed technology or use thereof. Nothing herein constitutes a representation or warranty by us to either develop, enhance, modify, distribute, market, sell, offer for sale, or otherwise maintain production of any our products or any other hardware, software, device, tool, information, or product. We moreover disclaim any and all warranties arising from the course of dealing or usage of trade.

Disclaimer

a) We acknowledge no liability for any injury or damage arising from the reliance upon the information.

b) We shall bear no liability resulting from any inaccuracies or omissions, or from the use of the information contained herein.

c) While we have made every effort to ensure that the functions and features under development are free from errors, it is possible that they could contain errors, inaccuracies, and omissions. Unless otherwise provided by valid agreement, we make no warranties of any kind, either implied or express, and exclude all liability for any loss or damage suffered in connection with the use of features and functions under development, to the maximum extent permitted by law, regardless of whether such loss or damage may have been foreseeable.

d) We are not responsible for the accessibility, safety, accuracy, availability, legality, or completeness of information, advertising, commercial offers, products, services, and materials on third-party websites and third-party resources.

Copyright © Quectel Wireless Solutions Co., Ltd. 2021. All rights reserved.

About the Document

Document Information	
Title	**L76K Reference Design**
Subtitle	GNSS Module Series
Document Type	Reference Design
Document Status	Released

Revision History

Version	Date	Description
-	2021-10-20	Creation of the document
1.0	2021-10-20	First official release

Contents

About the Document **3**
Contents **4**

1 Reference Design **5**
1.1. Introduction 5
1.2. Schematics 5

1 Reference Design

1.1. Introduction

This document provides the reference design of Quectel L76K GNSS module, including the design of block diagram, 3.3 V power supply and UART circuits, module interfaces, and antenna interfaces.

1.2. Schematics

The schematics illustrated in the following pages are provided for your reference only.

Block Diagram

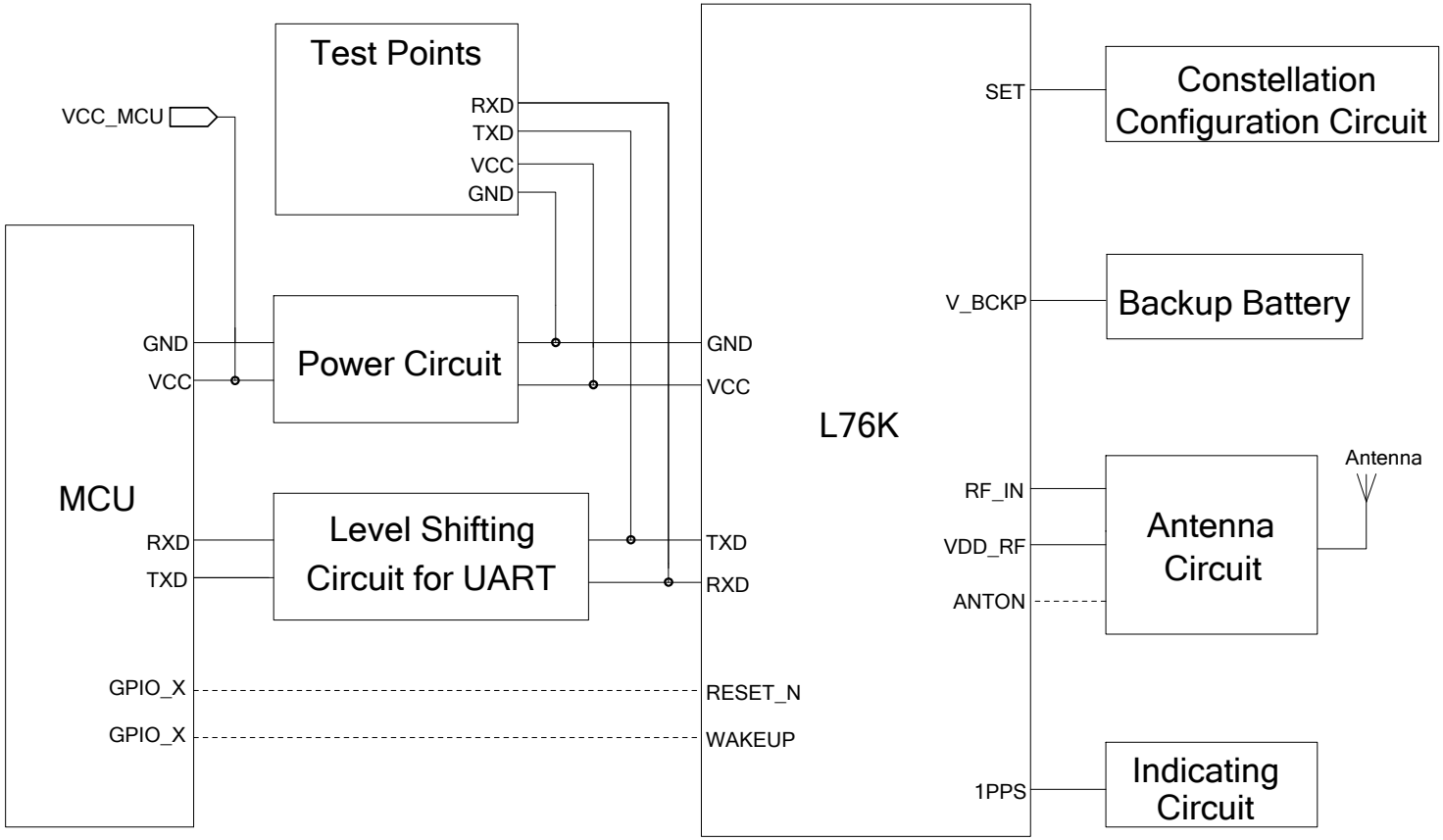

Quectel Wireless Solutions		
DRAWN BY Vijay ZHAO/Phil GAO	PROJECT L76K	TITLE Reference Design
CHECKED BY Storm BAO	SIZE A2	VER 1.0
	SHEET 1 / 4	DATE 2021/10/19

3.3 V Power Supply and UART Circuits

MCU Circuit

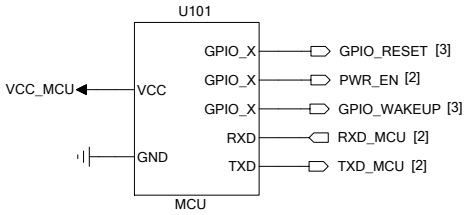

UART Circuit

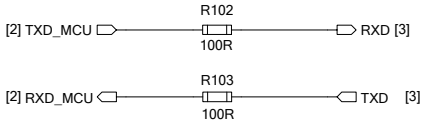

NOTE:

1. R102 and R103 are reserved for debugging the waveform of UART, and are also beneficial to ESD protection.
2. Generally, 100R is recommended for R102 and R103, but 0R also works well.
3. The above circuit can be used when the UART voltage of the MCU is the same as that of the module.

Power Management Circuit

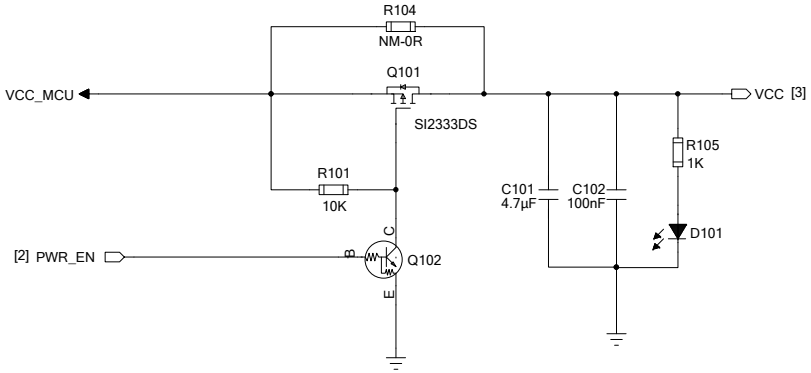

NOTE:

You can enter or exit Backup mode in the following way:

1. Cut off the VCC power supply and keep the V_BCKP power supply, the module will enter the Backup mode.
2. Once the VCC pin resumes power supply, the module will immediately enter the Continous mode.
   Under such circumstances, Q101, Q102 and R101 must be mounted but R104 should not be mounted.

Quectel Wireless Solutions		
DRAWN BY Vijay ZHAO/Phil GAO	PROJECT L76K	TITLE Reference Design
CHECKED BY Storm BAO	SIZE A2	VER 1.0
	SHEET 2/ 4	DATE 2021/10/19

Module Interfaces

Module Interfaces

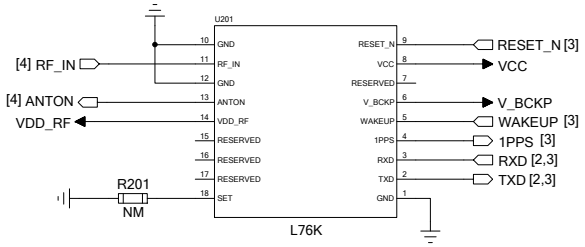

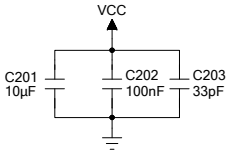

NOTE:

1. UART interface can be used for command input and NMEA sentence output.
2. The ANTON pin can be used to switch on/off the external power supply of the active antenna.
   It outputs high level in Continuous mode, and outputs low level in Standby mode and Backup mode.
3. The SET pin is used for constellation configuration, the default constellation is GPS and BeiDou.
   The GPS and GLONASS can be chosen by pulling the SET pin to low level, and R201 is recommended to be reserved.

Charge Circuit for RTC Logic

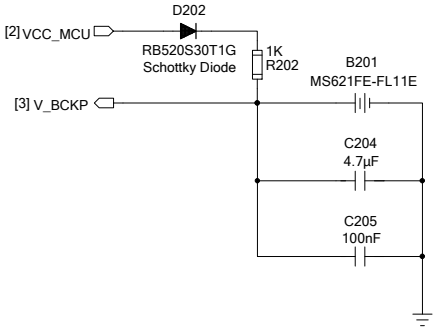

NOTE:

V_BCKP is designed to supply power for L76K RTC logic circuit when VCC is powered off.

Test Points

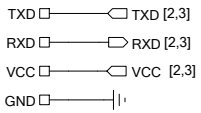

NOTE:

It is recommended to reserve test points for debugging the GNSS module.

Indicating Circuit

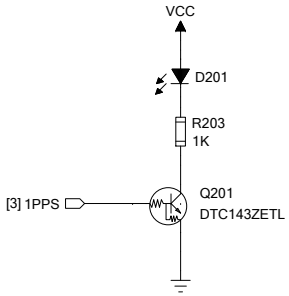

NOTE:

After the module is successfully positioned, the 1PPS indicator will flash at a frequency of 1 Hz.

Reset Circuit

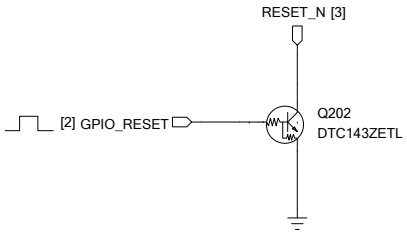

NOTE:

The RESET_N pin has been pulled up inside the module.

Standby Circuit

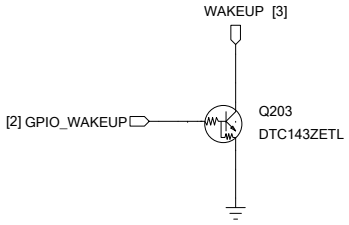

NOTE:

1. The WAKEUP pin has been pulled up inside the module.
2. Pulling down the WAKEUP pin will make the module enter the Standby mode; releasing the WAKEUP pin will make the module return to the Continous mode.
   For more information, see *Quectel_L76K_Hardware_Design*.

Quectel Wireless Solutions		
DRAWN BY Vijay ZHAO/Phil GAO	PROJECT L76K	TITLE Reference Design
CHECKED BY Storm BAO	SIZE A2	VER 1.0
	SHEET 3/ 4	DATE 2021/10/19

Antenna Interfaces

Active Antenna with Antenna Detection

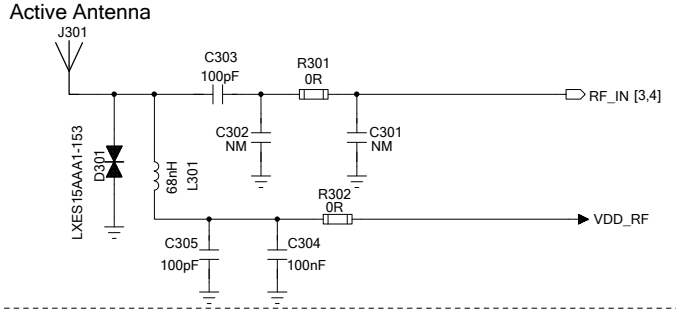

NOTE:

1. When the VDD_RF output current is less than 2.5 mA, the antenna is judged to be an open circuit.
2. When the output current is between 2.5 mA and 50 mA, the antenna is considered to be normal.
3. VDD_RF can output a maximum of 50 mA current. If the antenna current consumption is greater than 50 mA, the antenna is considered to be in a short circuit state.
4. Therefore, when choosing an active antenna, pay attention to its current consumption parameter. The antenna status can be output through NMEA sentences.

Active Antenna without Antenna Detection

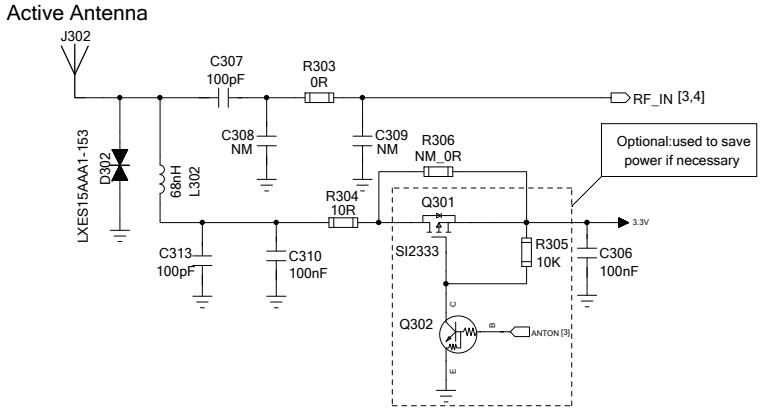

NOTE:

1. The reserved π-type circuit (R303, C308 and C309) is used to match the impedance of the antenna. By default, C308 and C309 are not mounted. R303 is 0 Ω and C307 is a DC blocking capacitor.
2. L302, C310 and C313 are recommended to be placed close to the RF line during layout.
3. The impedance of the RF signal line should be controlled to 50 Ω, and the line length should be as short as possible. For more information, see *Quectel_L76K_Hardware_Design.*

Passive Antenna

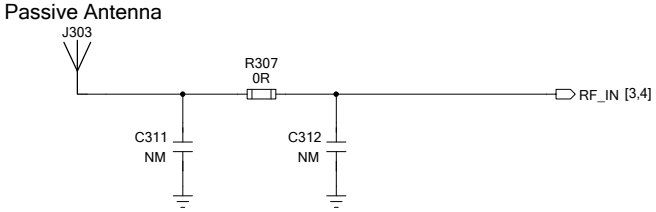

NOTE:

1. The reserved π-type circuit (R307, C311 and C312) is used to match the impedance of the antenna. By default, C311 and C312 are not mounted, and R307 is 0 Ω.
2. The impedance of the RF signal line should be controlled to 50 Ω, and the line length should be as short as possible. For more information, see *Quectel_L76K_Hardware_Design.*

Quectel Wireless Solutions		
DRAWN BY Vijay ZHAO/Phil GAO	PROJECT L76K	TITLE Reference Design
CHECKED BY Storm BAO	SIZE A2	VER 1.0
	SHEET 4 / 4	DATE 2021/10/19